NO	DESCRIPTION	MAT'L	REMARK
001	CHAIN CONTAINER ASS'Y	CANVAS+SS400	CCA251
002	LOAD CHAIN	Mn-B STEEL	ø11.2 X 34
003	ROLLER	SM45C	ø140
004	LOAD LIMITER	N/A	JDL-100
005	PENDANT & CABLE ASS'Y	N/A	

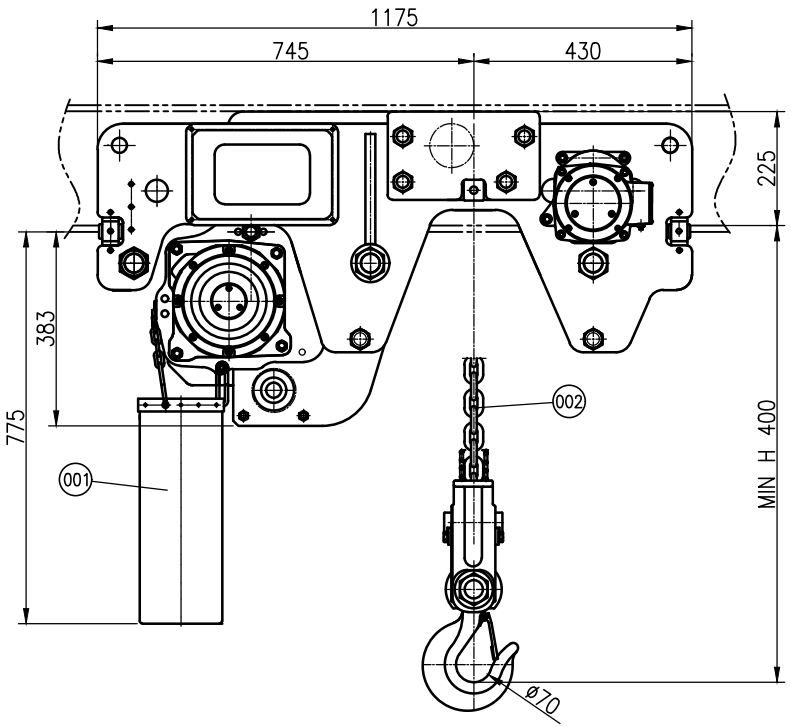

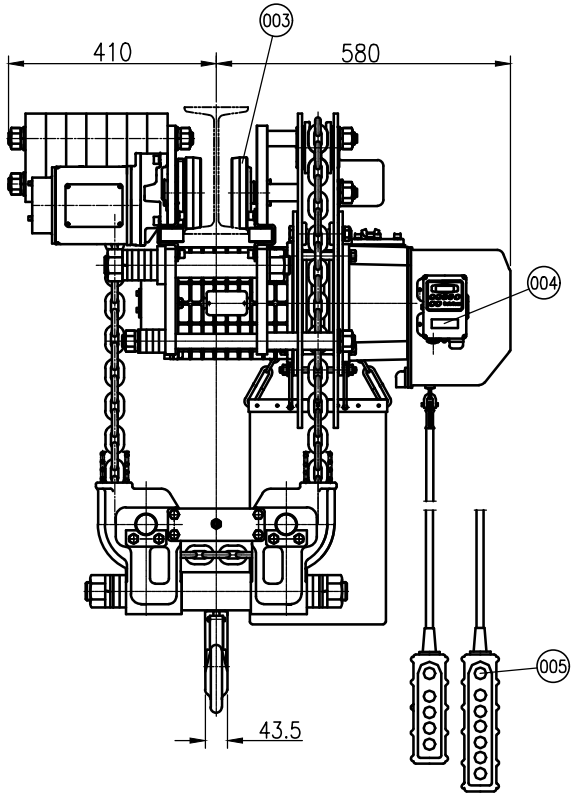

SPECIFICATION			
HOISTING LOAD		5	TON
TESTING LOAD		6.25	TON
LIFT HEIGHT		5	M
PENDANT CABLE		4.5	M
HOISTING	SPEED	1.35 – 3.25	M/MIN
	MOTOR	3.5KW x 4P x 1SET	
TRAVERSING	SPEED	5.2 – 15.2	M/MIN
	MOTOR	0.75KW x 6P x 1SET	
POWER SUPPLY		AC 220/380,440,460,480x3øx60Hz	
OPERATING METHOD		P.B type ON . FL	
WEIGHT		535.0	KG
I-BEAM SIZE		125	MM
ADD. LOAD CHAIN		5.32	KG/M
ADD. PENDANT CABLE		0.28	KG/M

REV.NO	DATE	REVISION DESCRIPTION	DRAWN	CHECKED	APPROVED

도면에 지시되지 않은 일반공차					
가공별 \ 치수	3-6	6-30	30-120	120-315	315-1000
선 삭 구멍간 거리	±0.1	±0.2	±0.3	±0.5	±0.8

TITLE	EDSHUM-5W CHAIN HOIST				PROJECTION
WORK NO	WORK NAME				
	OUTLINE DWG (MAX. LIFT 6M)				SCALE 1/1 Q'TY 1
DRAWN	CHECKED	REVIEWED	APPROVED	DRAWING NO	
H.J		LEE	Y. K	EDSHUM5W251	
2025.02.05		2025.02.05	2025.02.05		

DAESAN INoTEC INC